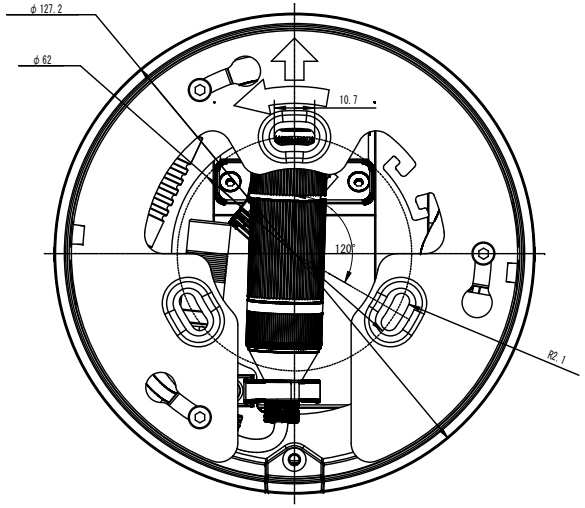
ϕ 127.2
ϕ 62
10.7
120°
R2.1

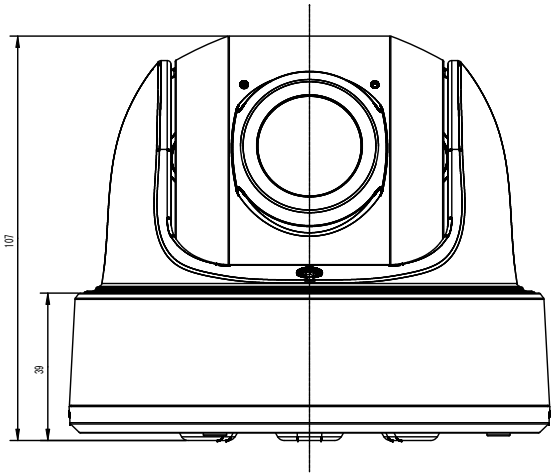
107
39

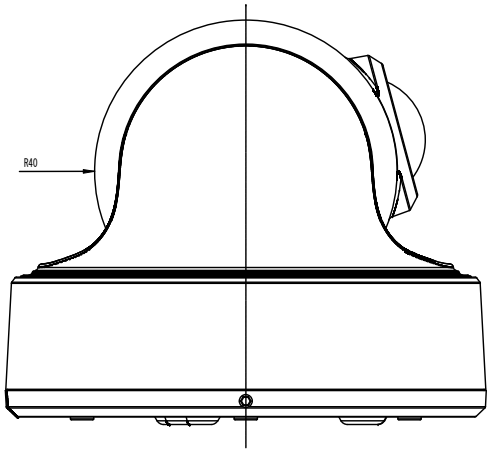
R40