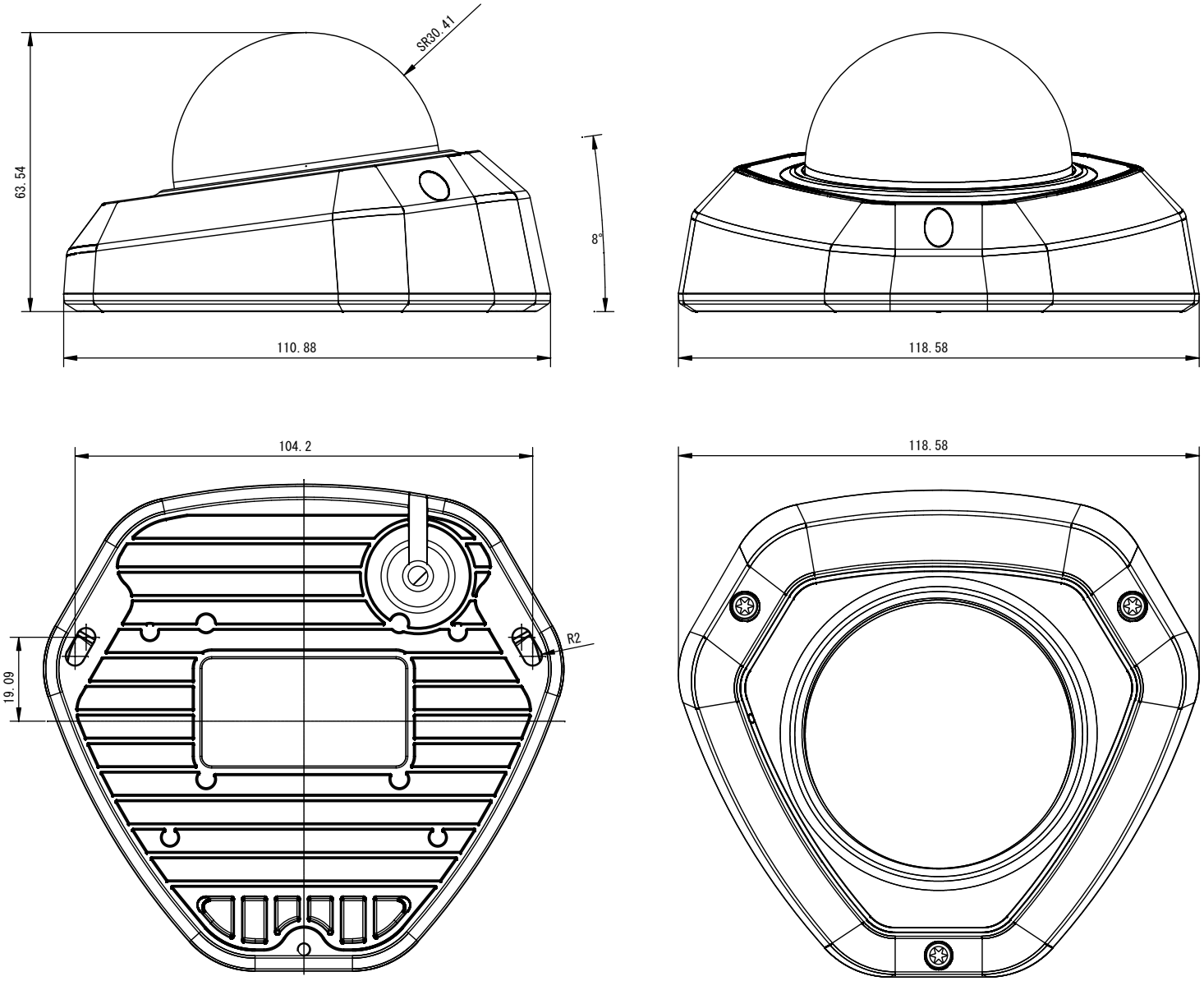
SR30.41
63.54
8°
110.88
118.58
104.2
118.58
R2
19.09