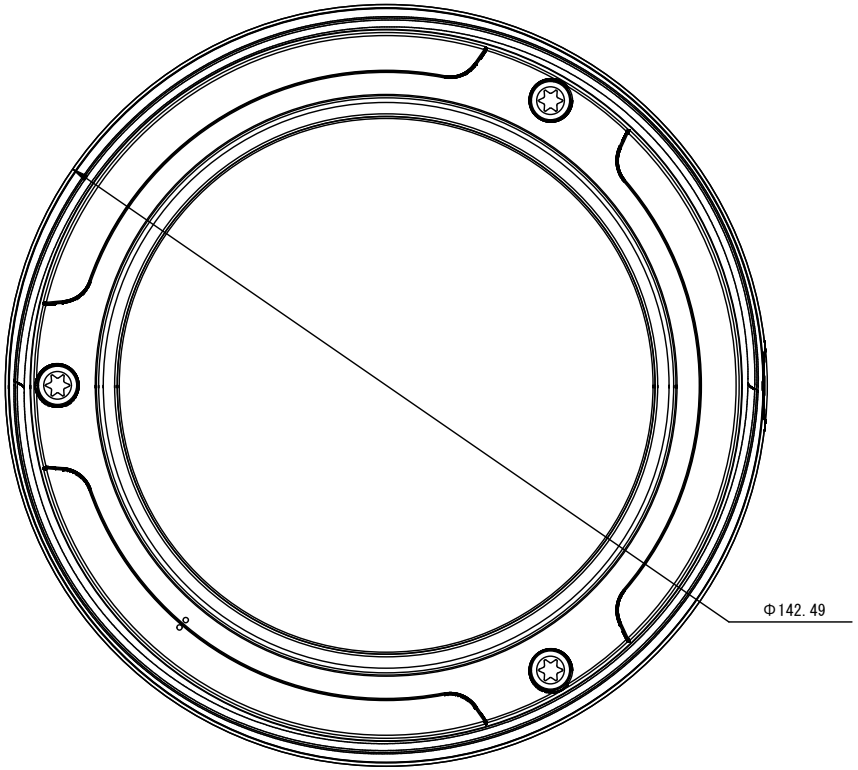
Φ142.49

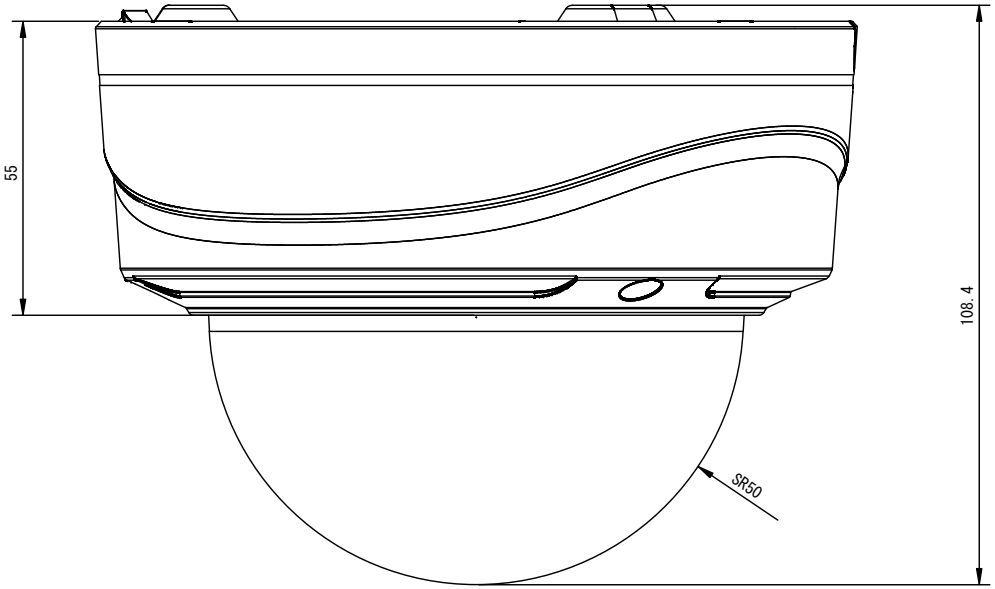
55
108.4
SR50